21A - TRANSMISSION, AUTO. 3500 - CONTROLS, GEARSHIFT, LOWER AUTOMATIC TRANSMISSION, A727,A998,A999,A500,A518 B,D BODY

90351 3500 A

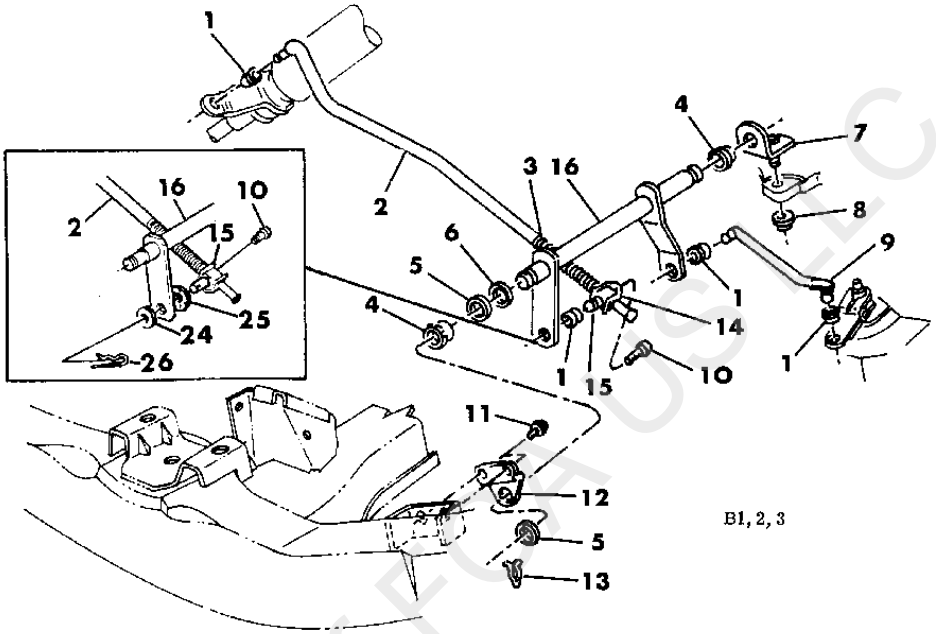

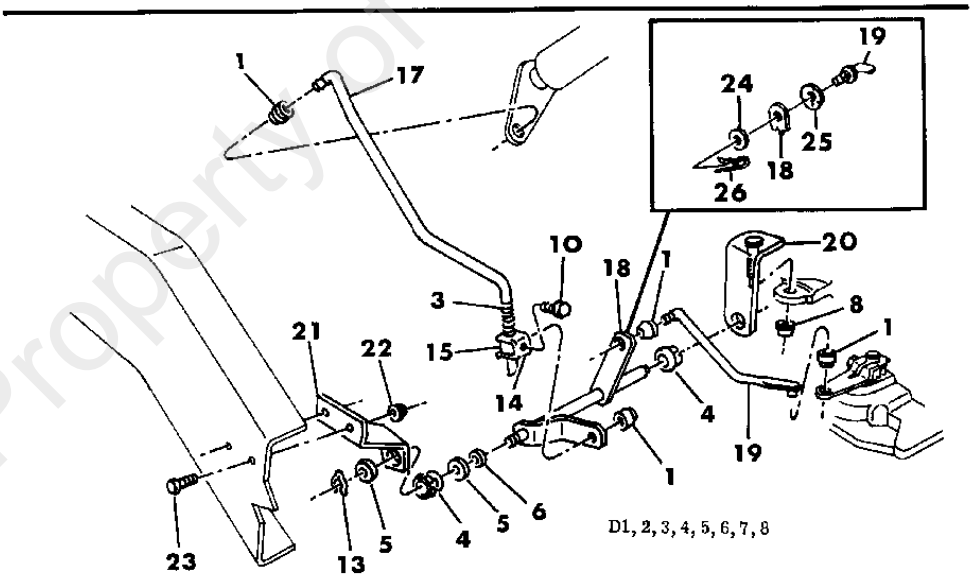

Property of FCA US LLC